CSL

Systems Built to Save

TM

Aquaflow

Irrigation controller

B & PLUS Models

INSTRUCTION & INSTALLER'S MANUAL

Corkill Systems Ltd
5 Tasman St, PO Box 16 Opunake, New Zealand
Phone 06 761 7531 Fax 06 761 7336
Email : info@corkillsystems.co.nz
Web site : www.corkillsystems.co.nz

Telarc. Registered

Health & Safety AS/NZS 4801

Aquaflow™

Models “B” and “P” Installation Manual

Contents

1. General Information

The Aquaflow is available in standard motor sizes from 4 kilowatts to 500 kilowatts, model CLSAF4B has a 4 kilowatt capacity, CSLAF50B is 50 kilowatt, etc.

A kit is available called the tandem kit witch will convert the AQUAFLOW B into a Tandem pump controller, this model controls two motors simultaneously and has individual motor circuit-breakers inside to protect the motors.

The AQUAFLOW is also available with a cascade option to run up to four pumps with redundancy for use in critical water supply for such as a fire or sprinkler system and complies with the fire safety regulations. **Note:** The basic model has the ability to run two cascade pumps.

The Aquaflow controller is an all in one solution for irrigation control is has the ability to automatically start stop on time basis, control of priming pump, dry run timer, no flow detection, sleep function and cascade control options.

For more information on the features consult the Danfoss manual.

1. CABLING AND MOTOR

The Aquaflow is designed to be permanently wired on a dedicated circuit with protection according to the controller specification sheet current ratings.

Motor cables are strongly recommended to be EMC type, 4 core screened with a dedicated earth conductor. Glands are available to properly connect the screen at the motor end, bond via the supplied clamp at the Aquaflow. This screen is to be bonded to earth at both ends. Keep the motor tails as short as possible and clear of the incoming cable to prevent an aerial effect.
Do not undersize cables, larger is better to assist minimizing RFI.

The above is critical if cow ID systems or other sensitive equipment in use or being contemplated. The screen should be retained over the cable as close as possible to the termination point (do not strip the screen at the base of the switchboard and then run motor tails adjacent other wiring - the RFI effect will be transferred into any adjacent cables).

The cable between the Aquaflow and Transducer is to be of minimum 0.2mm 2 core screened twisted pair and not to be run parallel with heavy current carrying cables. Belden type cable is preferred and is normally supplied with the Aquaflow. Earth the screen at both ends and keep the tails as short as possible.

The power supply cable to the drive can be non screened TPS or similar cable.
A Mains and RF filter is factory fitted internally in all controllers, this is normally adequate however we recognize there are certain areas where this filter may not be sufficient to suppress all radio interference, please contact us for more information if this is the case. The filter system meets both Class I and Class II of the international standards that all controllers are required to meet in Australasia for installation on networks containing either or both commercial and residential installations.

In suspect poor power areas, should the incoming voltage drop below the unit tolerance levels while the drive is ramping, the unit can trip on Error 13. This requires a complete shut down and restart.

The client should talk to their electrician or network supplier if this condition persists as the Electrical Regulations state minimum mains supply voltage levels. This requirement is well above the controller Low Voltage tolerance level, please note that this low voltage condition will not damage the controller but could damage other electrical apparatus.

The voltage tolerance level with three phase controllers is 380 volts.

2. Mounting and Wiring

This system consists of one motor with one or more pressure pumps attached.

1. Generally mount the Aquaflow adjacent the pressure pump.
2. Re-use the existing isolator normally at this point.
3. Remove power factor capacitor if connected (Aquaflow does this function).
4. Remove motor cable from the motor and re-terminate into the Aquaflow supply terminals L1, L2 & L3. Connect the Earth to the screw/terminal provided.
5. Fit a new cable (EMC screened cable preferred) from the Aquaflow terminals U,V,W to the motor, in some models this is a plug – be sure to put the plug back in carefully to the correct socket.
6. The use of a mechanical over pressure switch is recommended (we can supply this if need be) it can be connected to the remote start terminals of the drive.

3. Transducer Installation

Surface pump - General; mount the transducer as close to the pump head before the pressure tank if one is fitted in the main pipe work of the pump mounting the transducer to far away or in an auxiliary line may affect the readings due to friction losses in the plant pipe work.

Submersible pump – mount as close as possible to the pump above ground mounted at least a meter away from any bend and before the pressure tank if one is fitted

Connections:

Single pair screened belden cable is supplied with the Aquaflow, connect the white to terminal #1 at both Transducer and Aquaflow and Black to terminal #2 with the drain wire connected to Earth at both ends

Avoid running the transducer cable parallel with high current and/or voltage cables as interference can be induced into the cable. Make cables as short as possible inside the drive and strip off the minimum of sheathing on the cable to lessen interference induced into the cable.

4. LCP Keypad Operation and Parameter Editing

Status Display To display the current operation of the drive and all status messages of the Aquaflow press the "*Display Status*" button on the following screen display. If you keep on pressing the status display button it will scroll through the various states of the onboard PLC to check operation of unit for diagnostics.

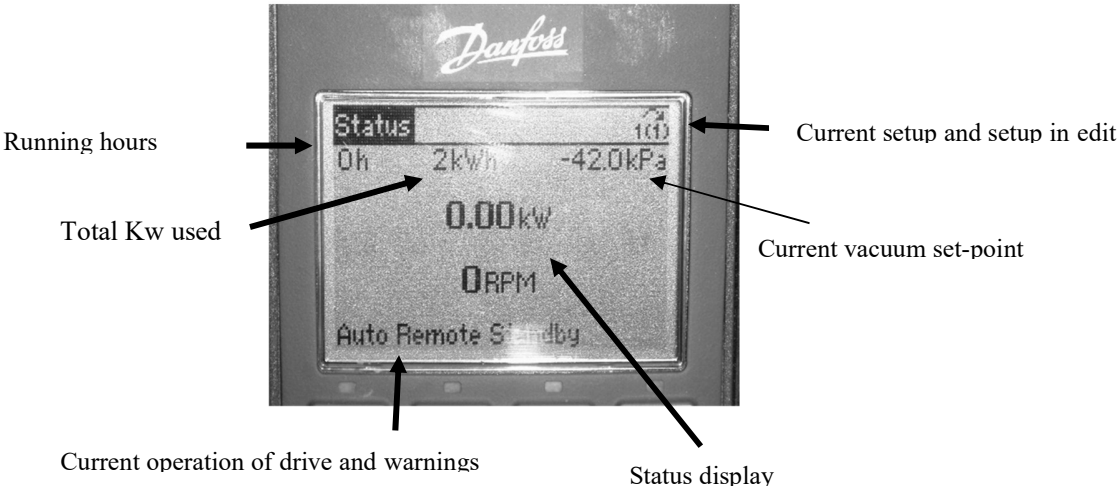

My personal menu To display the current user modifiable parameters of the drive press the "*Quick Menu*" button on the front of the lcp followed by the "*OK*" key

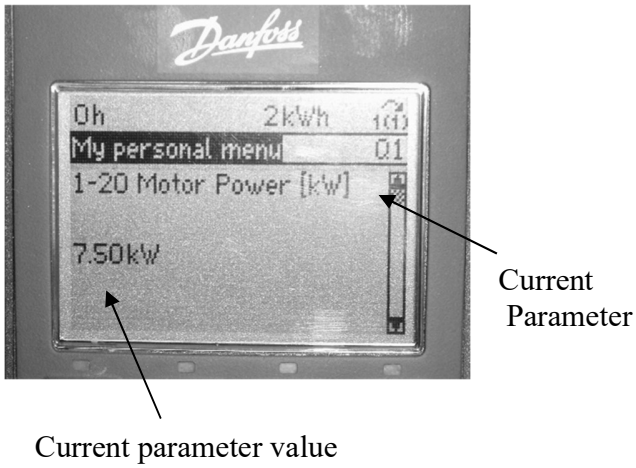

My personal menu These are the user modifiable parameters that are used when setting up the Aquaflow such things as motor power, pressure levels, automatic motor adaptation, motor ramp times, low and high speed limits etc…
Pressing the up and down button will scroll through the various settings of the Aquaflow. These are the settings that are used when commissioning the Aquaflow and all the relevant settings are in this menu to make it easy for anyone to install and set up an Aquaflow unit. Pressing the "*OK*" button on any parameter will enable you to be able to change the value of the parameter in edit and press the "*OK*" button when you are finished editing it to store the value.

5. Motor Set Up and Automatic Motor Tuning

Programming To make program changes press *"Quick menu"* key on the front of the LCP followed by the *"OK"* key, press the *"Display status"* key to exit.

How to stop and start the drive using the LCP for programming to stop unintended starts the drive can be stopped by pressing the *"Off"* key on the front of the LCP pressing the *"Auto on"* key on the front of the LCP will return the unit to run mode

Extended Menu this menu is password protected, if it is necessary to access this menu please phone Corkill Systems Limited for assistance.

Motor Set Up

With power on to the drive, press "*Off*" then the "*Quick Menu*".

Turn the selector switch on drive to "auto" and check and if necessary set the motor parameters #120 through to #125 as above, all other set ups will automatically update.

turn on Parameter #129 "Auto Motor Adapt". Press "*Auto On*"
And the drive will carry out the Auto Tuning function (not required if fitting a Tandem Kit); a message will be displayed when tuning is complete. Turn selector switch to "Off" before pressing *"Reset".* The Aquaflow should be ready to use.

6. special features setup

Before any of the advanced features of the Aquaflow controller can be used it is necessary to setup parameter 22-20 and perform the low power auto setup.
Once the pump setup is complete all the advanced features can be setup to protect the pump and motor from running dry or overheating from no flow conditions.
Prior to performing the pump test is necessary to fill the lines and prime the pump to do this close off the outlet tap and start the unit up in test mode until the pressure comes up.
To perform the pump test go into the main menu parameter 22-20 and set to enable and press the ok key it will ask you to close the outlet tap and press the hand on key once this has been done the pump will start to ramp up to running speed and work out the stall current of the pump at various speeds just follow the on screen instructions.

Sleep mode parameters 2240-2246
If the load on the system allows for stop of the motor and the load is monitored, the motor can be stopped by activating the Sleep Mode function. This is not a normal Stop command, but ramps the motor down to 0 RPM and stops energizing the motor. When in Sleep Mode certain conditions are monitored to find out when load has been applied to the system again. Sleep Mode can be activated either from the No Flow detection/Minimum Speed Detection

Dry run parameters 2226-2227
No Flow Detection can also be used for detecting if the pump has run dry (low power consumption high speed).

No flow parameters: 2221-2224
This function is used for detecting a no flow situation in pump systems to eliminate pump damage.

Broken belt detection parameters: 2260-2262
The Broken Belt Detection can be used to detect if the estimated motor torque is below the broken belt torque value (par. 22-61) to trip the drive or offer an alarm

Short cycle protection parameters: 2275-2277
In some applications, there will often be a need for limiting the numbers of starts. One way to do this is to ensure a minimum run time (time between a start and a stop) and a minimum interval between starts. This means that any normal stop command can be overridden by the Minimum Run Time function (par. 22-77) and any normal start command

Flow compensation parameters: 2280-2290
It is sometimes the case that is not possible for a pressure transducer to be placed at a remote point in the system and it can only be located close to the fan/pump outlet. Flow compensation operates by adjusting the set-point according to the output frequency, which is almost proportional to flow, thus compensating for higher losses at higher flow rates.

End of curve function parameters: 2250-2251
The End of Curve conditions occur when a pump is yielding a too large volume to ensure the set pressure. This can occur if there is a leakage in the distribution pipe system after the pump.

Pipe fill mode parameters: 2900-2905
In water supply systems water hammering can occur when filling the pipe too fast. It is therefore desired to limit the filling rate. Pipe Fill Mode eliminates the occurrence of water hammering associated with the rapid exhausting of air from a piping system by filling the pipes at low rate. The function is useable in horizontal, vertical and mixed piping systems. Due to the fact that the pressure in horizontal pipe systems does not climb as the system fills, filling horizontal pipe systems requires a user specified speed to fill for a user specified time and / or until a user specified pressure set point is reached.

Time-based Functions parameters 2500-2590
Use Timed Actions for actions needing to be performed on a daily or weekly basis, e.g. different references for working hours / non-working hours. Up to 10 Timed Actions can be programmed in the frequency converter. The Timed Action number is selected from the list when entering parameter group 23-0* from the Local Control Panel. Par. 23-00 – 23-04 then refer to the selected Timed Action number. Each Timed Action is divided into an ON time and an OFF time, in which two different actions may be performed

7. Cascade Options and Setup

The cascade feature of the controller works as a redundancy system that switches pumps on the basis of a lead (variable speed pump) and auxiliary (fixed speed pumps) where it will switch over the fixed speed pumps in stages to meet flow requirements.
For more information on this consult the Danfoss manual.

Cascade Option with Lead Pump Alternation The motors must be of equal size. This function makes it possible to cycle the drive between the pumps in the system (maximum of 2 pumps). In this operation the run time between pumps is equalized reducing the required pump maintenance and increasing reliability and lifetime of the system.

Basic Cascade In the basic cascade mode the controller is designed to run with one variable speed pump (lead) and two fixed speed pumps that will stage the fixed pumps based in stages to meet flow requirements.

Master Follower Cascade In this system there are up to four pumps all run of aqua flow controllers with one connected to a transducer fitted with a special control option card (master) in this system all pumps run in stage at a constant speed and follow the operation of the master unit based on feedback from the master unit.

8. Auxiliary Equipment Setup

Motor thermistor input trip

For larger motors with an inbuilt thermal cut out switch this can be placed into terminals 50 and 53 and set parameter 190 to thermistor input to enable this must be enabled in each setup.
The drive will alarm thermal cut out on the display in the event of a motor cut out or over temperature and will not resume operation until the drive is reset and the temperature of the motor goes down.

Switching auxiliary equipment via the Aquaflow

For remote switching of auxiliary equipment use Auxiliary Relay #1 or #2 in the drive.
This is a clean set of contacts to operate priming pumps etc.
Warning - this relay will switch up to 400 volts do not load to more than 5 amps!!
No warranty will be recognised if this relay is melted!!
The relay is factory programmed to operate whenever the drive is running and can be programmed to operate on a variety of different functions that these relays can be programmed for consult the Danfoss manual for more assistance.

Switching Aquaflow to auto via remote

For remote switching of Aquaflow to auto join the DIN rail terminals #6 & #10 together using the remote switch.

Switching Aquaflow to test via remote

For remote switching of Aquaflow to test join DIN rail terminals #5 & #6 together using the remote switch or existing spare contact on plant start contactor.

Auxiliary wiring connections recommendations

When using the Aquaflow to connect to auxiliary equipment or vice versa we recommend using screened cable like the Belden cable supplied with the Aquaflow for use with the transducer to avoid interference.
If possible use low voltage 24 volt control wiring, if interfacing with 230 or 400 volt controls, use slave relays and bring back switch signals to the Aquaflow at low voltage using screened Belden or equivalent cable, remember to earth both ends of the cable screen.
Make cables as short as possible inside the drive and strip off the minimum of sheathing on the cable to lessen interference being induced into the cable.

7. Pressure Level Adjustment

Setting the Aquaflow pressure level

If the type of pump and pressure is given to us it will be set in the Aquaflow using the following preset values:
Surface pump; auto-5 bar, 60 second ramp to 33hz
Submersible pump; auto-5 bar, 3 second ramp time to 33hz
If no pump was stated, the settings will be as for submersible pump.

To adjust the pressure from the preset position scroll thru the quick menu list until you find set point 1add press ok.
The drive will highlight the pressure press the keys to adjust it and press ok to store it in.

8. Ramp up and Idle Speed adjustment

submersible pump – most types of submersible pumps don't like the long ramp times of surface pumps and the weight of the stator and impellors will cause damage to the pumps thrust bearings resulting in premature bearing failure, consult the pump manufacture the maximum ramp times and minimum speed and place these into the Aquaflow controller.

The motor is a so called "Can motor" with a stainless steel can between the rotor and stator. There is a larger and a more magnetic resistant
Air-gap than on a normal motor hence a weaker field which results in the motors being designed with a higher rated current than a norm motor with similar rated power. The special "can motor" is used due to the wet installation conditions. The drive needs to be designed for the system according to output current to be able to run the motor at nominal power.

The pump contains thrust bearings which will be damaged when running below minimum speed which normally will be 30 Hz. Most manufacturers of submersible pumps recommend that the pump is ramped to min. speed (30 Hz) in max. 2 -3 seconds.

EMC performance can be difficult to achieve due to the fact that the special pump cable which is able to withstand the wet conditions in the well normally is unscreened. It is recommended to use a Danfoss sine wave filter on submersible pumps for this reason.
A solution could be to use a screened cable above the well and fix the screen to the well pipe if it is made of steel.

Pipe-Fill mode can be enabled to prevent water hammering. The Danfoss VLT AQUA Drive is capable of filling vertical pipes by slowly ramping up the pressure with a user specified rate (units/sec). If enabled the drive will, when it reaches min. speed after startup, enter pipe fill mode. The pressure will slowly be ramped up until it reaches a user specified Filled Set Point, where after the drive automatically disables Pipe Fill Mode and continues in normal operation.

Surface pump most types of surface pumps require to be primed using a priming pump and may take a few minutes to fill up the inlet pipe work. In this case it is advisable to turn on the start delay function to delay starting of the drive and use the source of turning on the drive to turn on the priming pump for a set time to fill up the pipe work before the drive ramps up to normal operation.

9. Trouble Shooting

RUNNING FIRST TIME FAULTS Drive won't start.
Remote start not wired properly, drive is in "Local Stop", overloads tripped (tandem models only).

Cause/Remedy: check to see if overloads are tripped (tandem models only) reset if necessary and set them to the correct current rating for the motors.
Check to see if remote start is wired correctly by placing a wire link between the remote start terminals.
The drive it may show local stop on the display you will need to press "*Auto on*" on the control panel on the Danfoss Drive.

RUNNING FIRST TIME FAULTS Drive won't speed up in variable speed modes
Internal reference set points are set incorrectly, Break in transducer cabling or transducer wired incorrectly into Aquaflow.

Cause/Remedy: check to see if Aquaflow is working by temporally shorting terminals #1 and #2, drive should speed up indicating that there is a fault with the reference adjustment or transducer. In the main display use the up or down button to check the transducer current on terminal #54, if the current is zero then there is an open circuit with the transducer cabling or the wiring of the transducer plug.

If the current is at or above 4ma then the transducer connections are inverted or the pressure adjustment simply needs adjusting to the correct pressure level in the plant see "Set Up and Automatic Motor Tuning".

RUNNING FIRST TIME FAULTS Drive won't slow down in auto
Short in transducer cabling, Aquaflow and is not gaining pressure due to pump loss of prime.

Cause/Remedy: check for that the pump has water, if the plant has some pressure check the pressure level setting.

In the main display use the up or down button to check the transducer current on terminal #54, if the current is 20ma then there is a short circuit fault with the transducer cabling or the wiring of the transducer plug.

RUNNING FIRST TIME FAULTS Drive won't switch between modes (set ups).
Drive is forced into a setup.

Cause/Remedy: .
If drive is not switching setups need to go into **parameter #010** and select multi setup.

RUNNING FIRST TIME FAULTS Drive draws excessive kilowatts and trips out.
Maximum speed set to high pumps over driven or overseas spec motor.

Cause/Remedy: drop down the top speed if necessary or change the belt pulley ratio. Some motors draw more current than they specify on the name plate at new Zealand supply rating especially on multi volt overseas motors dropping the top speed down a little bit will reduce the current it will draw.

10. Common Error Messages.

WARNING/ALARM 4 Phase fault (MAINS PHASE LOSS).
A phase is missing on the supply side or the mains voltage imbalance is too high. This message can also appear if there is a fault in the input rectifier on the frequency converter.

Cause/Remedy: Check to make sure all 3 Phases present to the Aquaflow, if these are OK check other 3 Phase equipment in the Dairy. E.g. to make sure your power supply is OK to the Dairy. Turn off the Aquaflow completely for 40 sec then back on, "*Reset*" and then "*Auto On*" may need to be pressed on the control panel on the Danfoss Drive.

WARNING 6 Voltage warning low (DC LINK VOLTAGE LOW).
The intermediate circuit voltage (DC) is below the under voltage limit of the control system.

Cause/Remedy: The incoming voltage to the Aquaflow is too low for it to operate. E.g. there could be a fault with the power lines. The voltage will need to be returned to normal for the Aquaflow to operate

WARNING/ALARM 9 Inverter Overload (INVERTER TIME).
The electronic, thermal inverter protection reports that the frequency converter is about to trip because of an overload (too high current for too long). The counter for electronic, thermal inverter protection gives a warning at 98% and trips at 100%, while giving an alarm. The frequency converter cannot be reset until the counter is below 90%.
The fault is that the frequency converter is overloaded by more than 100% for too long.

Cause/Remedy: Too many pots open for too long,Incorrect motor data has been put into the drive. Turn off the Aquaflow completely for 40 sec then back on, "*Reset*" and then "*Auto On*" may need to be pressed on the control panel on the Danfoss Drive.

WARNING/ALARM 13 Over current (OVERCURRENT).
The inverter peak current limit (110% of the rated current) has been exceeded. The warning will last approx 1 – 2 seconds, following which the frequency converter will trip, while giving an alarm. Turn the frequency converter off and check whether the motor shaft can be turned and whether the motor size matches the frequency converter.

Cause/Remed, incorrect motor data has been put into the drive, over speeding of the drive or excessive ramp times. Turn off the Aquaflow completely for 40 sec then back

on, "*Reset*" and then "*Auto On*" may need to be pressed on the control panel on the Danfoss Drive.

ALARM 14 Earth fault (EARTH FAULT).
There is a discharge from the output phases to earth, either in the cable between the frequency converter and the motor or in the motor itself. Make sure no power factor capacitor is fitted to the motor.

Cause/Remedy: Either the motor or the cable to the motor has a short to earth in it, or a drive output IGBT may be shorted. An Electrician will have to check this. Turn off the Aquaflow completely for 40 sec then back on, "*Reset*" and then "*Auto On*" may need to be pressed on the control panel on the Danfoss Drive.

ALARM 16 Short-circuit (CURR.SHORT CIRCUIT):
There is a short circuit on the drive output, this could be in the cable, isolator or motor terminals or windings or a drive output IGBT may be shorted.

Cause/Remedy: Either the motor or the cable to the motor has a short to earth in it or a drive output IGBT may be shorted. An Electrician will have to check this.
Disconnect the drive at the motor output terminals and turn the Aquaflow back on to prove the controller is OK. Turn off the Aquaflow completely for 40 sec then back on, "*Reset*" and then "*Auto On*" may need to be pressed on the control panel on the Danfoss Drive.

11. Help !!!

A full list of warnings and alarms are listed at the rear of the Danfoss Operating Instructions supplied with the Aquaflow, please check these and take note of the Error Code before phoning for assistance. We need to know the code in order to help you.

The Aquaflow has a 12 month warranty; this warranty does not cover water or physical damage and is for free replacement of components. The parts sent will be charged for until the faulty parts are returned to Corkill Systems for evaluation and credit.

Labour, travelling or any subsequent loss will not be paid or subsidised, if you have a problem, please phone as soon as possible for assistance to minimise the time spent fault finding. Please state that you have an Aquaflow problem and have any Error Codes available.

In the interests of improvement and clarity, we welcome any suggestions regarding this manual or the Aquaflow product.

Any problems, anytime, anywhere,

Phone (06) 761 7531 (International Code ++64 6 7617531)
Fax (06) 761 7336,
Email; info@corkillsystems.co.nz
Web; www.corkillsystems.co.nz

Corkill Systems Limited
5 Tasman Street, PO Box 16
Opunake 4616
Taranaki
New Zealand

12. TERMS AND CONDITIONS OF SALE

GENERAL
All quotations, orders and contracts for the sale or supply of goods or services by Corkill Systems Limited shall unless, otherwise agreed in writing, be subject to the following terms and conditions:

1. ORDERS
All orders are made and accepted on the terms and conditions here stated. Order cancellations are subject to terms agreed as at time of cancellation.

2. PRICES Prices quoted remain firm for 30 days but beyond that time prices may be adjusted.

3. DELIVERY
Delivery dates given by Corkill Systems Limited are approximate and rely on prompt receipt of all necessary information regarding the order. Corkill Systems Limited will use their best effort to meet the estimated date but will not be held liable for any delay due to circumstances arising in the industry generally or within Corkill Systems Limited work due to delay in receipt of supplies from sub-contractor or any other circumstances beyond Corkill Systems Limited control. No liability will be taken for any late deliveries unless delivery date has been guaranteed by Corkill Systems Limited in writing. Otherwise Corkill Systems Limited will use its best endeavour to meet delivery dates.

4. DELIVERY CHARGES
Unless otherwise agreed in writing or at the discretion of Corkill Systems Limited, all freight will be charged to the Purchaser's account.

5. RETURN OF GOODS
No goods may be returned without prior written approval of Corkill Systems Limited and may be subject to a restocking fee. Approval will be contemplated by Corkill Systems Limited only in circumstances where:

5.1 Advice of any proposed return is given within 30 days following the date of the invoice.
5.2 Transportation and other costs for return are prepaid by the Purchaser
5.3 Goods to be accompanied by a copy of Corkill Systems Limited Packing Slip or Invoice
5.4 Goods to be accompanied by a written explanation of reasons for return.
5.5 Corkill Systems Limited may charge for handling, inspection, disassembly or reconditioning stock items.
5.6 Units manufactured, modified or imported as special or unique units will only be accepted for credit Less the cost of converting the unit back to a standard saleable unit.

6. TERMS OF PAYMENT
All goods shall be paid for on the 20th day of the month following delivery. Corkill Systems Limited may at any time require full or part payment in advance of delivery and the purchaser shall not be entitled to any damages or compensation arising from such requirement. Goods on time payment shall be subject to the conditions on the Time Payment contract in addition to the terms contained within this document.

7. PRODUCT SAFETY
Corkill Systems Limited products are supplied and manufactured to high standards but no electrical equipment is failsafe within itself. When risk to person or property may be involved a fail-safe device should be an integral part of the equipment, the entire responsibility for which rests with the Purchaser.

8. OWNERSHIP OF GOODS
The goods shall remain the property of Corkill Systems Limited until they have been fully paid for. Risk shall pass to the purchaser on delivery. The purchaser will insure the goods. The purchaser acknowledges that it is in possession as agent and bailee for Corkill Systems Limited and owes a fiduciary duty to Corkill Systems Limited until such time as legal and equitable title shall transfer. The purchaser's right to possession of unpaid goods shall terminate on demand by Corkill Systems Limited, which may enter or authorize an agent to enter the purchaser's premises to recover the goods.

9. PRODUCT WARRANTY
Provided that the product has been subjected to normal and proper use only, all new products supplied by the company are warranted to be free from defects in materials and workmanship from the date of shipment to the Purchaser either for one year or the Manufacturers warranty term subject to the following conditions:

10.1 All electrical equipment to be installed and commissioned by qualified trade-persons.
10.2 Adequate measures to be taken against moisture and/or mechanical damage.
10.3 Recommended cabling procedures and/or circuitry protection must be provided.
10.4 Suitable overload protection be provided and installed where required.
10.5 All faulty components to be returned to Corkill Systems Limited before a credit can be made.

In the event of equipment failure, all faulty components will be repaired or replaced free of charge, consequential loss/equipment damage and/or labor and/or travelling will not be subsidized. Any unauthorized dismantling, repair or modification voids this warranty.

10. LIABILITY UNDER WARRANTY
Corkill Systems Limited liability under this warranty or any other warranty whether express or implied in law or fact shall be limited to the repair or replacement of defective material and workmanship and in no event shall Corkill Systems Limited be liable for consequential or indirect damages.

11. GOVERNING LAW This agreement shall be construed according to the laws of New Zealand.

Customer Name..... Installation Date.....

Postal Address.....

Delivery Address.....

Phone ..... Fax..... Mobile.....

Email..... Purchased from.....

Installer Business Name.....

Installer Technician Name.....

Postal Address.....

Delivery Address.....

Phone ..... Fax..... Mobile.....

Email.....

AQUAFLOW Model #..... Serial #.....VLT Model.....

Manufacture Date.....Program.....Software Version.....

Tested by.....Signed.....

Master Pressure Pump Type..... Model.....

Slave Pressure Pump Type.....Model.....Starter Type.....

AQUAFLOW Mounting position..... Transducer mounting position.....
(I.e. switchboard/machine room/store) (i.e. Interceptor/Sanitary Can)

Check Valve installed on Master Pump Inlet / Exhaust Y / N Slave Pump Inlet / Exhaust Y / N

Master Pump Motor Make.....Model.....Kw.....

RPM.....Nominal Voltage.....Amps.....Hz.....

Auto Motor Adaption done ...Y / N Program uploaded to LCP..... Y / N

Installer Name..... Signed.....

For any concerns or comments, please note separately and fax with this form

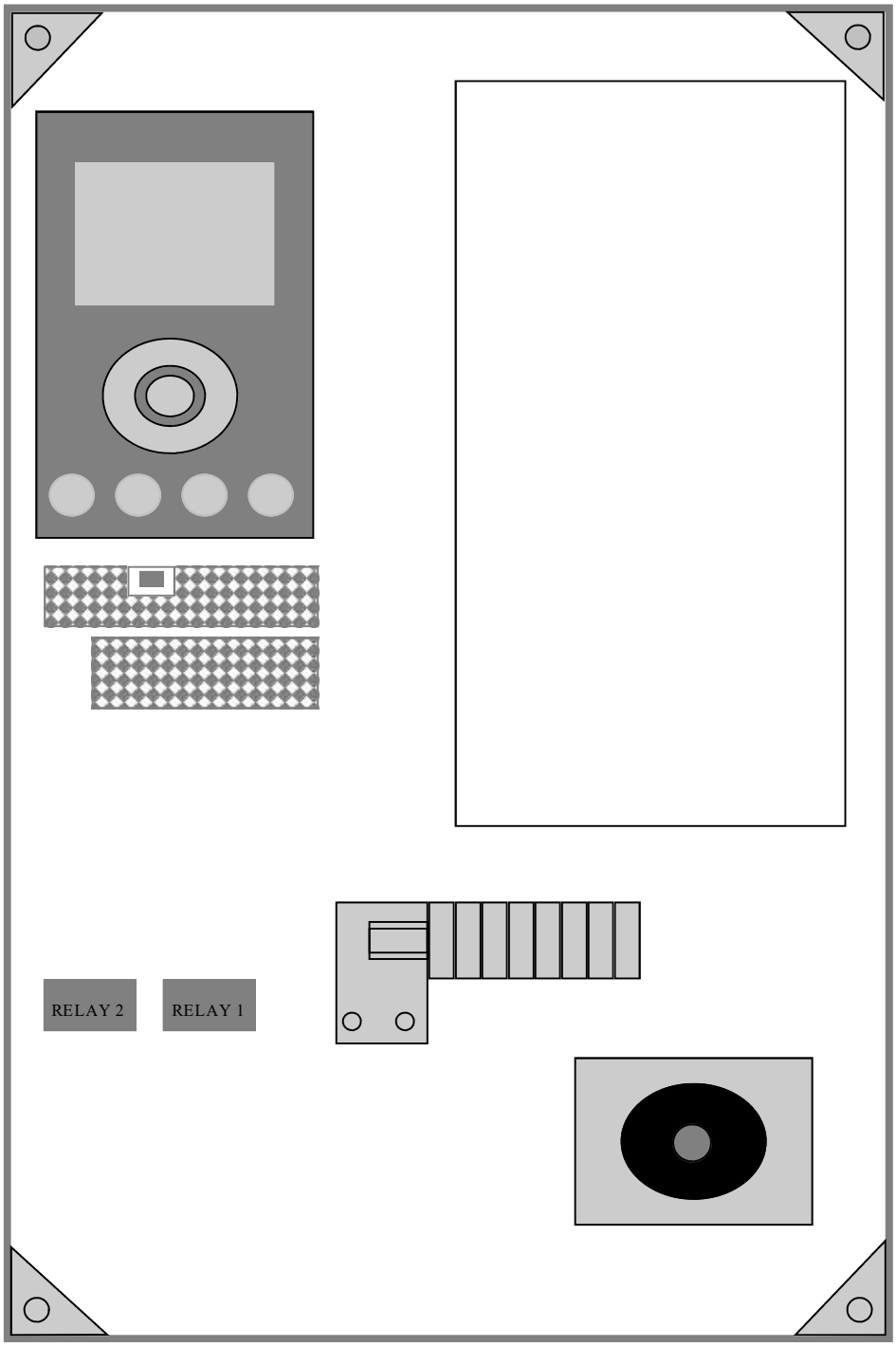

CORKILL SYSTEMS LTD
5 Tasman St, PO Box 16
OPUNAKE, TARANAKI. NEW ZEALAND
Ph (06) 761 7531 Fax (06) 761 7336

LAYOUT FOR
FC SERIES IRRIGATION
CONTROLLER

CSL-FCIRRIGATOR-LAYOUT.PUB **3/12/07**

Please note: that the dynamics of an irrigation control system or water pump control system widely vary and that this system will need to be tuned after installation to the plant and pump and specific features such as pipe fill sleep mode and low power auto detection need to be setup during commissioning.
Please phone CSL for assistance

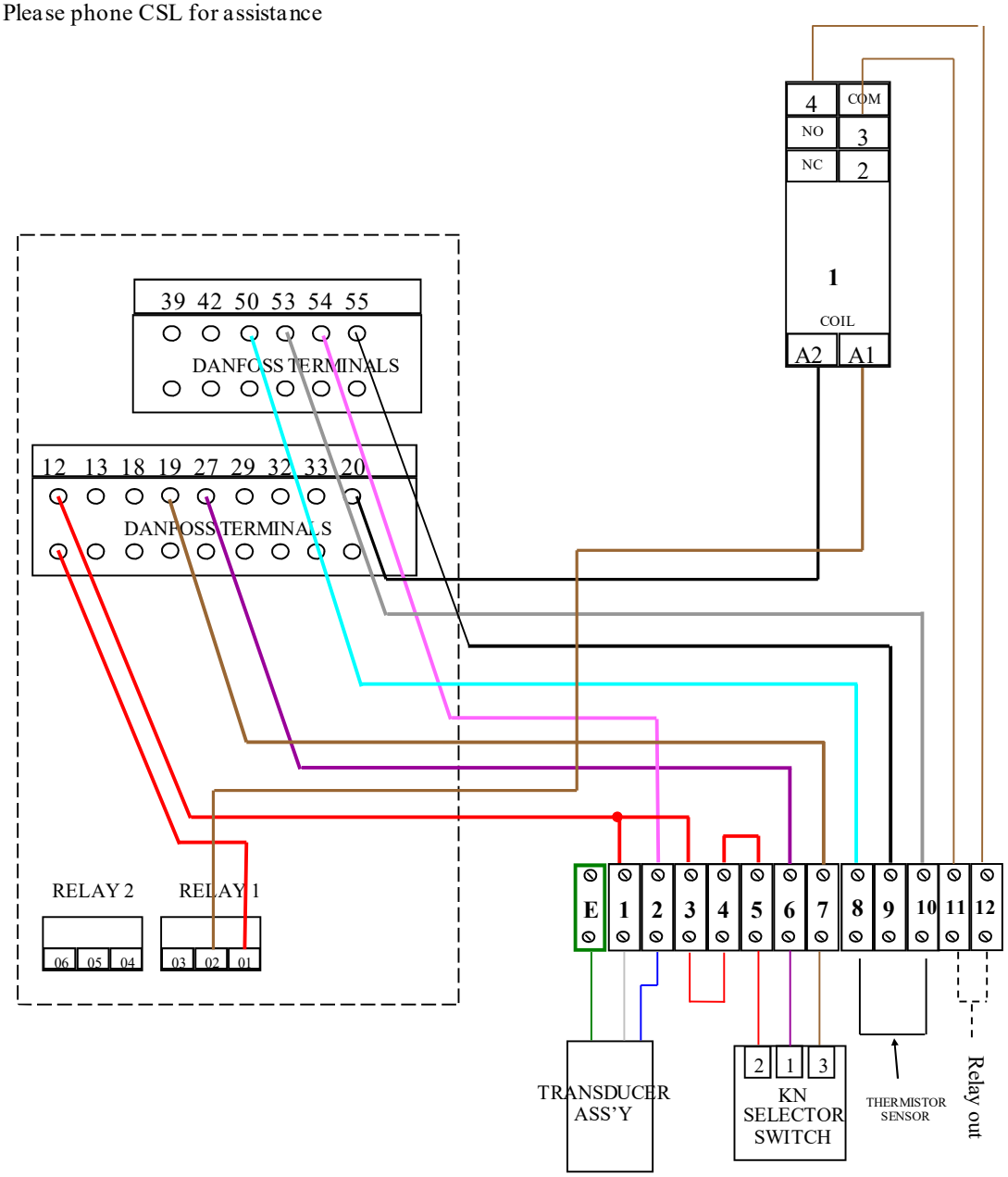

CORKILL SYSTEMS LTD
2 King St, PO Box 16
OPUNAKE, TARANAKI. NEW ZEALAND
Ph (06) 761 7531 Fax (06) 761 7336

CIRCUIT DIAGRAM FOR
FC SERIES
IRRIGATOR
CONTROLLER

CSL-FC-IRRIGATOR-WIRE.PUB COPYRIGHT JUNE2001 STEV E CORKILL Monday, 10 December 2014